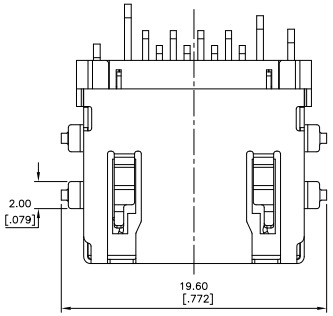

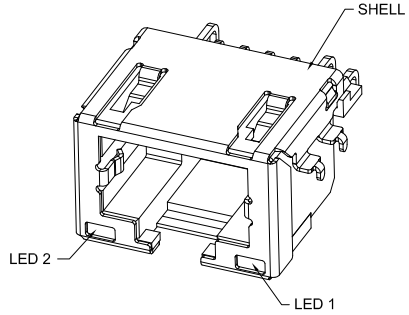

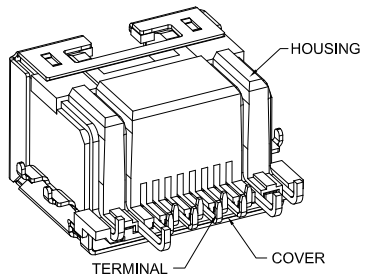

Electrical Characteristics :
- Insulation Resistance : 100MΩMin.
- Contact Resistance : 50mΩ Max.
- Withstand Voltage : 1000 VAC 1 minute.
- Current Rating : 1.0A

Material:
- Housing : Thermoplastic UL94V-0
- Contact : Selective Gold Plating
- Terminal : 0.30mm Thickness Phosphor Bronze Plated With Gold And Tin In Solder Area.
- Shell : SUS,Nickel Plated On The All Area

PART NO : 8 7 8 8 K 5 - B ∗ 1 ∗

- Positions
- Contacts
- Housing Color
  B : Black
- Led Options
- Ports
- Gold Plated
  0 : Gold Flash
  1 : 6u"
  2 : 15u"
  3 : 30u"
  4 : 50u"

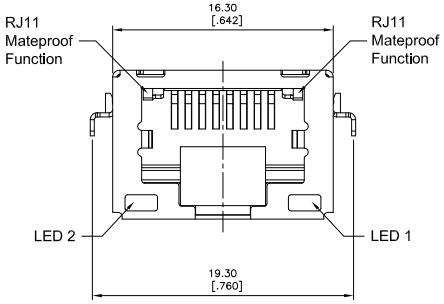

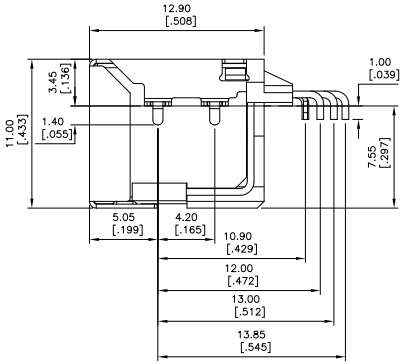

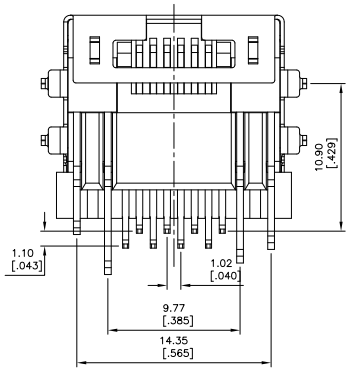

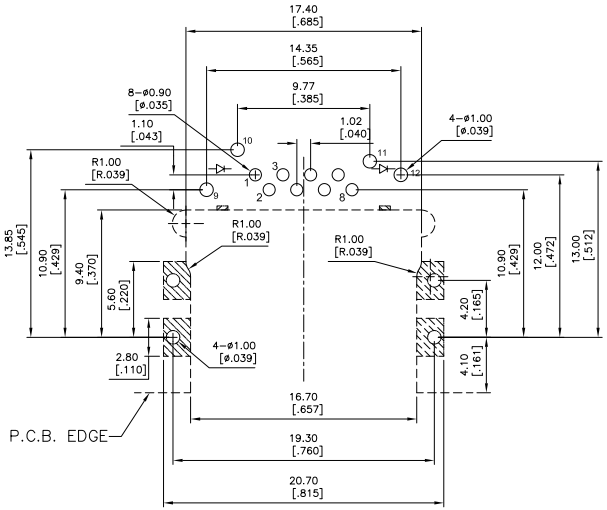

RECOMMENDED PCB LAYOUT
TOP VIEW

RECOMMENDED PCB THICKNESS:1.20± 0.05mm

LED ELECTRIC CHARACTERISTIC	
9(+) ⊳ 10(-)	LED 2
11(+) ⊳ 12(-)	LED 1

LED Color Options Table

LED Color Options		LED DASH OPTION
LED 2 (Left)	LED 1 (Right)	
No LED	No LED	0
Yellow	Green	1
No LED	Green	2
Yellow	No LED	3
Green	Yellow	4
Green	Green	5
Yellow	Yellow	6
Orange/Green	Orange/Green	7
Yellow/Green	Yellow/Green	8
Orange/Green	Yellow	9

CHAMPWAY 冠泰電子有限公司
CHAMPWAY ELECTRONICS CO., LTD.

ZONE	REV.	DESCRIPTION	DATE	APPD.
Ⓐ				
Ⓑ				
Ⓒ				
Ⓓ				
Ⓔ				

FILE NO : 87 (SERIES)

TOLERANCE(公差) :
0.000 mm ± 0.075 mm
0.00 mm ± 0.15 mm
0.0 mm ± 0.25 mm

TITLE 圖 名	RJ45, Partial Shielded, With LED, Offset Type(7.55mm), Thru Hole, RJ11 Mateproof Function			UNIT 單位	mm inch
PART NO. 料 號	8788K5-B∗1∗			SCALE 比 例	1 : 1
REV. 版 本	A.0	DATE 日 期	2009-12-02		
CHECKED BY 審 核	Michael		DRAWN BY 製 圖	Sunny	