| RevNo | Revision note | Date | Signature |
|---|---|---|---|
| | | | |
| | | | |

## NOTE

1. RATING : DC 12V 50mA
2. CONTACT RESISTANCE : 100mΩMAX
3. GENERAL TOLERANCE : +/- 0.3 mm
4. MANUFACTURING SPECIFCATION WOULD BE ACCORDANCE WITH WT0158
5. PART NO.(P/N.):

ES107VM P - C 053 R - R

- 3.8x4.7x5.3 VERTICAL
- P=WITH BOSS
- WITH CAP
- DIMENSION "H" 053=5.3mm
- PACKING R=REEL

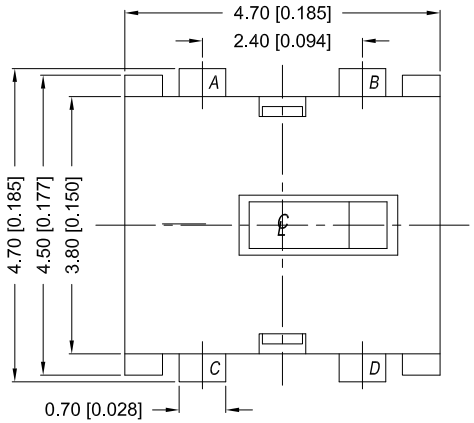


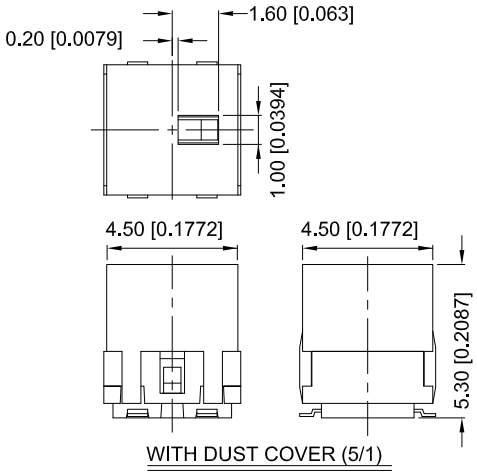


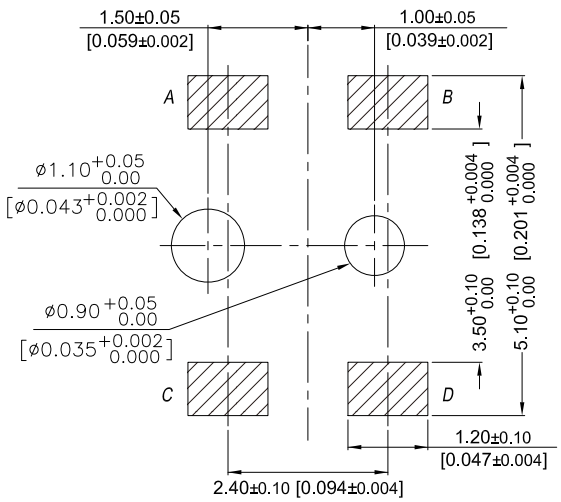


P.C.B LAYOUT

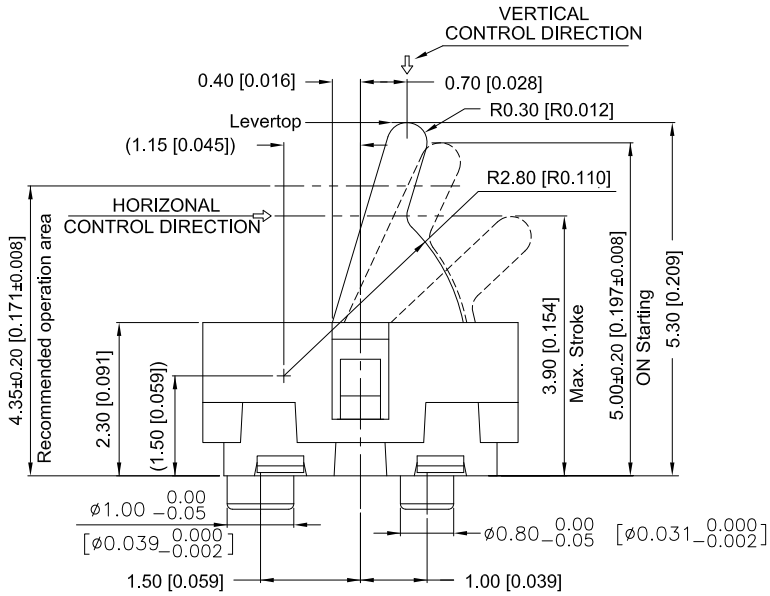


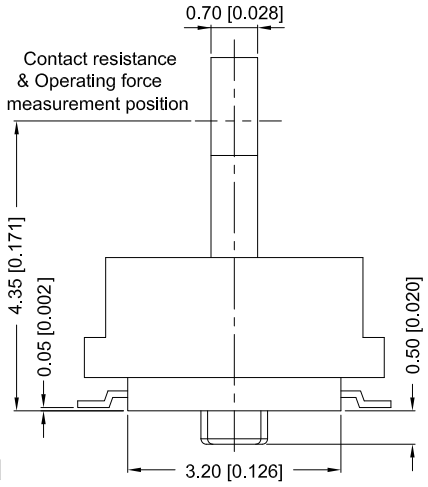


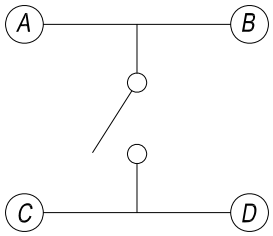


CIRCUIT DIAGRAM

| | | | |
|---|---|---|---|
| Designed by L.Y.D | | CHAMPWAY 冠泰電子有限公司 CHAMPWAY ELECTRONICS CO., LTD. | |
| Checked by | | | |
| Approved by | Unit mm | Scale 1/1 | Date 2011.10.14 |
| Item Detector Switch | Tool A-Cad | Sheet 1/1 | Rev. 0 |
| Model 3.8x4.7x5.3 VERTICAL SMD | Drawing name ES107VMP-C053 R-R | | |